Series4 Data Sheet

Visit us on the WEB www.series4.co.uk

Westwood Court, Calmore Industrial Estate, Totton, Hampshire, SO40 3WX England

Tel: +44 (0)23 80 866377 Fax: +44 (0)23 80 866323 Email: paul.m@series4.co.uk

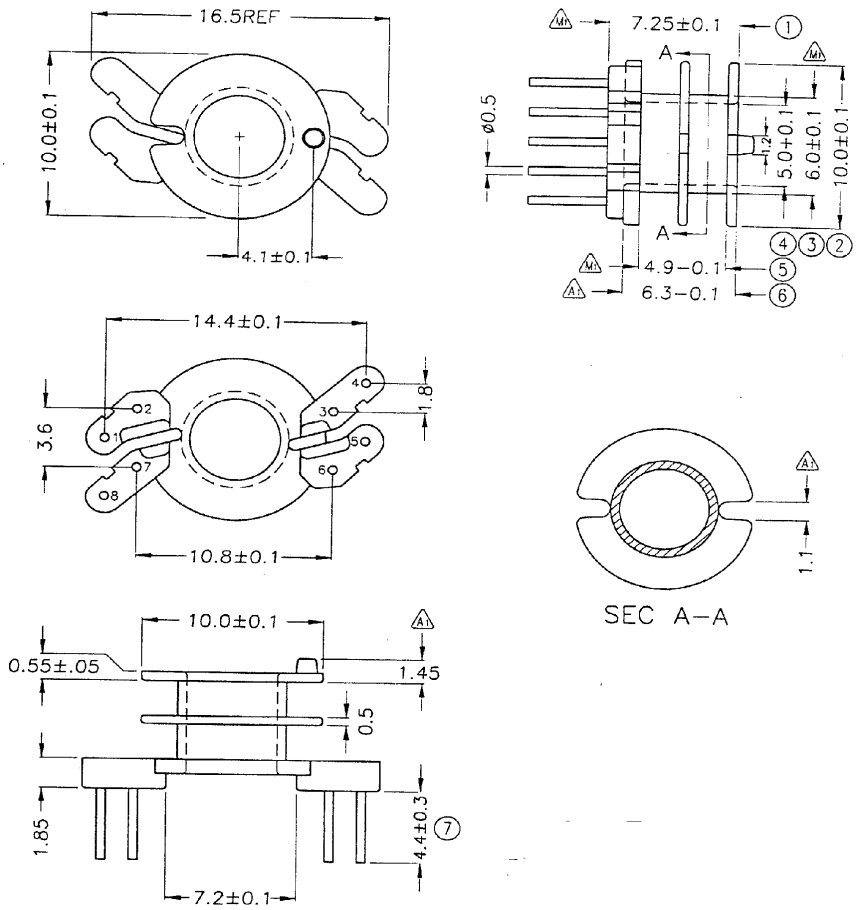

BOBBIN NAME: RM-5

Series4 Part No: BCRM5-2-8 OLD REF: S008

SPECIFICATION: 2 SECTION 8 PINS

BOBBIN MATERIAL: PHENOLIC PM-9630

PIN MATERIAL: CP WIRE

PIN DIMENSION: 0.5 ROUND PIN

PULLING STRENGTH: OVER 1.0 KG 2lbs

UL RATING: 94V-0

UNIT: MM

TOLERANCE: +/- 0.1MM